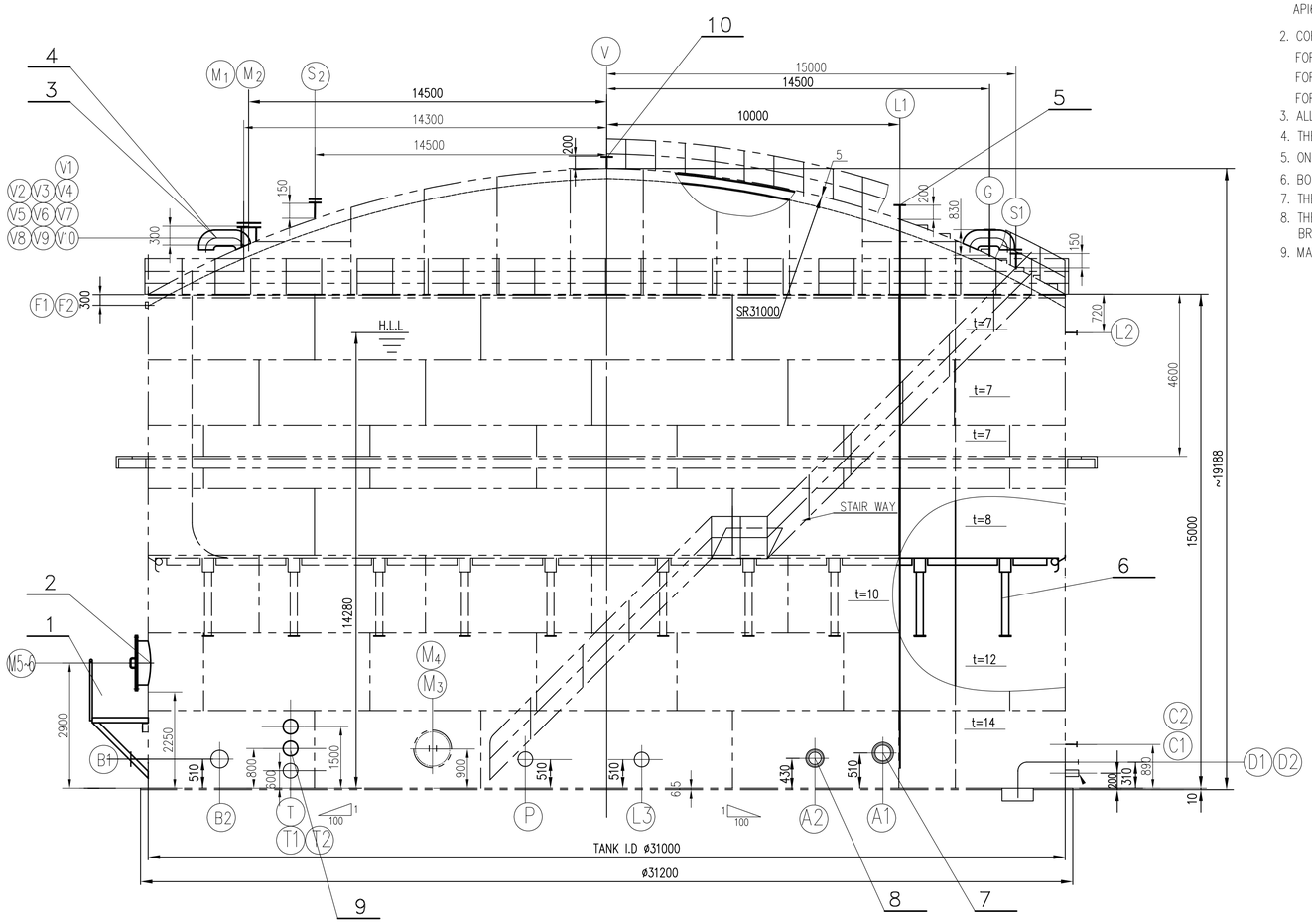

NOTES

1. THIS TANK SHALL BE FABRICATED, ERECTED. TESTED AND ACCEPTED ACCORDING TO API650 11TH "WELDED STEEL TANKS FOR OIL STORAGE"
2. CORROSION ALLOWANCE:
   FOR BOTTOM COURSE OF SHELL AND ANNULAR PLATE: 3 mm;
   FOR OTHER COURSES OF SHELL PLATE : 1.5 mm;
   FOR ROOF AND BOTTOM SKETCH PLATE OF TANK: 0 mm.
3. ALL DIMENSIONS ARE IN mm, UNLESS OTHERWISE SPECIFIED.
4. THE ROOF PLATES SHALL NOT BE ATTACHED TO THE SUPPORTING MEMBER.
5. ONE 1/4" TELLTALE HOLE IN REINFORCING PLATE SHALL BE ON HORIZENTAL CENTERLINE.
6. BOLT HOLES SHALL STRADDLE THE FLANGE CENTERLINE.
7. THE MATERIAL OF GASKET USED IN THIS TANK IS COM. NON-ASB. SHEET.
8. THE ROOF CIRCULATION VENTS SHALL BE SPACED AS EQUALLY AS POSSIBLE WITHOUT BREAKING THE ROOF SUPPORTING MEMBERS.
9. MATERIAL LIST IS FOR ALTERATION PART ONLY.

DESIGN CONDITION

CODE		API 650 11TH. JUNE.2007
CAPACITY	m^3	10000
CONTENTS	FLUID	PETROL
	DENSITY Kg/m^3	725
OPERATING	TEMP. ℃	AMB.
	PRESS. kg/cm2g	ATM.
DESIGN	TEMP. ℃	60
	PRESS. kg/cm2g	FULL OF WATER
CORR.ALLOWANCE	mm	SEE NOTE 2
STRESS RELIEF		AS PER CODE
ELECTRODE TYPE		AS PER WPS
LIVE LOAD	N/m2	1220
WIND LOAD	km/h	160
SEISMIC FACTOR		NO
EMPTY WEIGHT	Tons	~252
OPERATING WEIGHT	Tons	~8066
WT. FULL OF WATER	Tons	~11574
INSULATION	mm	NO

PARTS NO.	DWG. NO.	DESCRIPTION	QTY	SINGLE WEIGHT(KG)	TOTAL WEIGHT(KG)	REMARKS
11	08020.300.E511.06-01	NOZ.ORIE.DWG				
10	08020.300.E511.06-10	VENT (V)	1		101	
9	08020.300.E511.06-09	SPARE (T)(T2)	2	3.91	7.82	
8	08020.300.E511.06-08	CIRCULATION (A2)	1		230	
7	08020.300.E511.06-07	INLET (A1)	1		312	
6		FLOATING ROOFS	1		3450	
5	08020.300.E511.06-06	LT (L1)	1		558	
4	08020.400.E511.06-05	ROOF CIRCULATION VENT (V3-10)	8	110	880	
3	08020.400.E511.06-04	REMOVABLE ROOF CIRCULATION VENT (V1-2)	2	148	296	
2	08020.300.E511.06-03	SHELL MANHOLE WITH BLIND (M5~6)	2	409	818	
1	08020.300.E511.06-02	MANWAY LADDER & PLATFORM	2	422	844	

MATERIAL

SHELL	16MnR
ANNULAR PLATE	16MnR
BOTTOM PLATE	Q235-A
ROOF PLATE	Q235-A
REINFORCING PLATE	16MnR(FOR SHELL) Q235-A (FOR ROOF)
FLANGE,COVER & FORGED NOZZLE	16Mn
NOZZLE NECK PLATE	16MnR(FOR SHELL) Q235-A (FOR ROOF)
NOZZLE NECK PIPE	20#
BOLT/NUT	A193Gr.B7/A194Gr.2H
STIFFENING RINGS	Q235-A
SUPPORTS	Q235-A
GASKET	N.A.
INSULATION	
HEATING COIL	

INSPECTION & TESTING

MAIN PLATE		MILL SHEET
RADIOGRAPHIC		YES (BY API 650)
MAGNETIC PARTICLE		YES (BY API 650)
DYE PENETRANT		YES (BY API 650)
VACUUM TEST		BOTTOM (53 KPa)
PNEUMATIC TEST		
HYDROSTATIC TEST		14.28m (WATER LEVEL)
WELDING	PROCEDURE	YES
	PERFORMANCE	FOR BUTT WELD
	PRODUCTION	

PAINTING

PREPARATION	INSIDE	REFER TO SPEC. FOR SURFACE PREPARATION & PAINTING
	OUTSIDE	
PAINTING	INSIDE	
	OUTSIDE	
BOTTOM OUTSIDE		
GROOVE PROTECT		

NOZZLE SCHEDULE

MARK NO.	SIZE	Q'TY	RATING AND STD.	TYPE	FACING	DESCRIPTION	REMARKS	
A1	16"	1	ASME B16.5 150#	S.O	R.F	INLET	CHANGE	Drawing No. : 08020.300.E511.06-07
A2	12"	1	ASME B16.5 150#	S.O	R.F	CIRCULATION	CHANGE	Drawing No. : 08020.300.E511.06-08
B1	16"	1	ASME B16.5 150#	S.O	R.F	OUTLET		
B2	16"	1	ASME B16.5 150#	S.O	R.F	SPARE OUTLET	WITH BLIND	
C1~2	2"	2	ASME B16.5 150#	S.O	R.F	OIL RETURN		
D1~2	4"	2	ASME B16.5 150#	S.O	R.F	WATER DRAIN OFF		
F1~2	8"	2	ASME B16.5 150#	S.O	R.F	FOAM POURER		
G	6"	1	ASME B16.5 150#	S.O	R.F	GAUGING HATCH		
L1	6"/8"	1	ASME B16.5 150#	S.O	R.F	LT	CHANGE	Drawing No. : 08020.300.E511.06-06
L2	3"	1	ASME B16.5 150#	S.O	R.F	LSHH		
L3	3"	1	ASME B16.5 150#	S.O	R.F	LSLL		
M1~2	24"	2				ROOF MANHOLE		
M3~4	30"	2				SHELL MANHOLE		
M5~6	30"	2				SHELL MANHOLE WITH BLIND	NEW	Drawing No. : 08020.300.E511.06-03, 08020.300.E511.06-02 & 04.028
V	14"	1	ASME B16.5 150#	S.O	R.F	VENT	CHANGE	Drawing No.:08020.300.E511.06-10
V1~10		10				ROOF CIRCULATION VENT	NEW	Drawing No. : 08020.400.E511.06-05
P	2"	1	ASME B16.5 150#	S.O	R.F	PT NOZZLE		
S1	3/4"	1	ASME B16.5 150#	S.O	R.F	SPARE OUTLET	WITH BLIND	
S2	2"	1	ASME B16.5 150#	S.O	R.F	SPARE	WITH BLIND	
T/T2	1 1/2"	2	ASME B16.5 150#	S.O	R.F	SPARE	WITH BLIND	
T1	1 1/2"	1	ASME B16.5 150#	S.O	R.F	TE NOZZLE		

Project : Tank Modification for the Installation of Internal Floating Pan (Tank No. TK-09 & TK-10)

Description : GENERAL ASSEMBLY (TK-09 & 10)

Drawing No : 08020.300.E511.06-01 Page 1 of 2

CEYLON PETROLEUM STORAGE TERMINALS LIMITED
MUTHURAJAWELA TERMINAL

GRADE OF (QUALIFICATION: CLASS A

中华人民共和国 建设部工程设计 甲级证书011102-si

专业	签字	日期

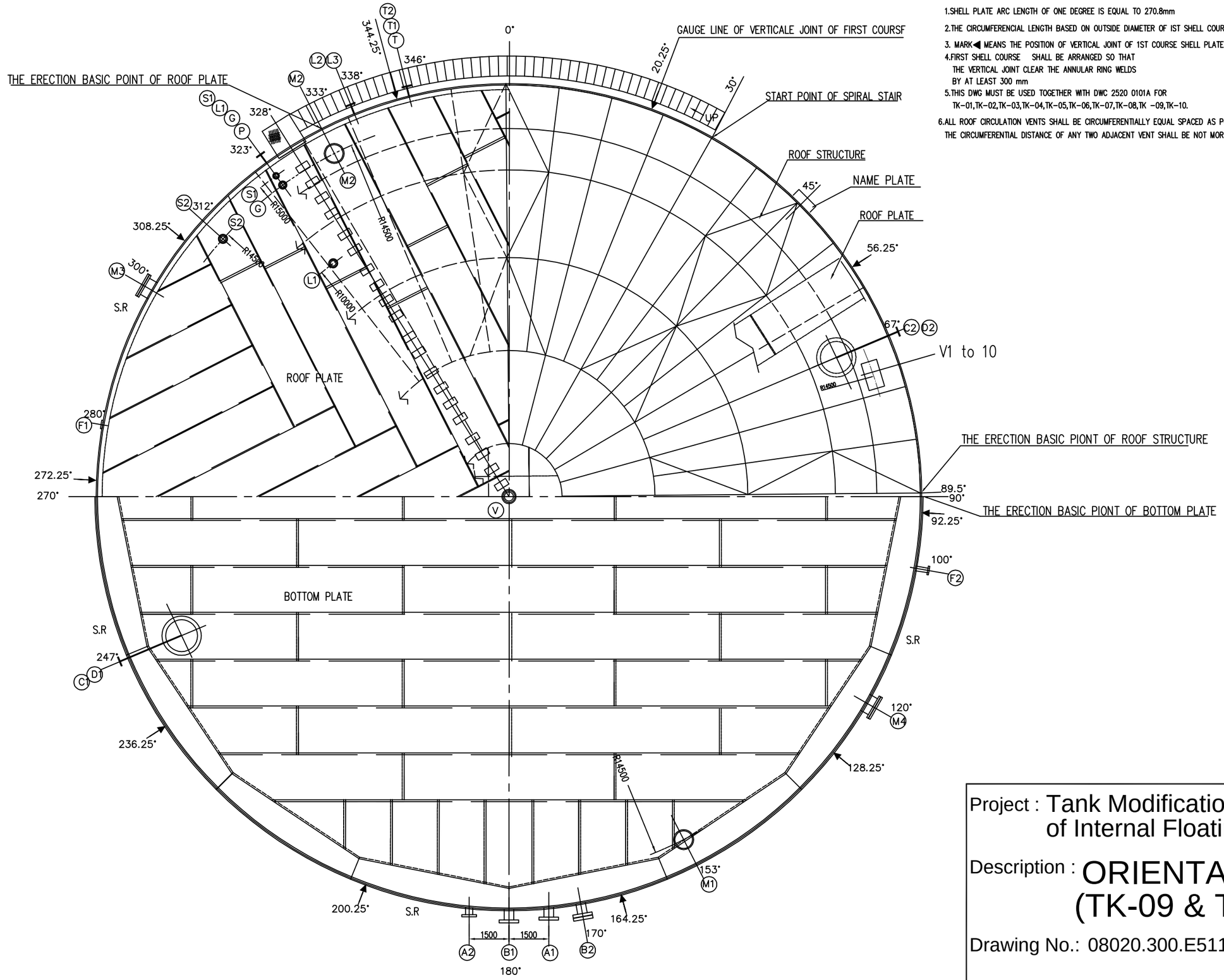

NOTES:

1.SHELL PLATE ARC LENGTH OF ONE DEGREE IS EQUAL TO 270.8mm

2.THE CIRCUMFERENCIAL LENGTH BASED ON OUTSIDE DIAMETER OF IST SHELL COURSE IS 97477.3mm

3. MARK◀ MEANS THE POSITION OF VERTICAL JOINT OF 1ST COURSE SHELL PLATE.

4.FIRST SHELL COURSE SHALL BE ARRANGED SO THAT THE VERTICAL JOINT CLEAR THE ANNULAR RING WELDS BY AT LEAST 300 mm

5.THIS DWG MUST BE USED TOGETHER WITH DWC 2520 0101A FOR TK-01,TK-02,TK-03,TK-04,TK-05,TK-06,TK-07,TK-08,TK -09,TK-10.

6.ALL ROOF CIRCULATION VENTS SHALL BE CIRCUMFERENTIALLY EQUAL SPACED AS POSSIBLE WITHOUT BREAKING ANY ROOF STRUCTURE. THE CIRCUMFERENTIAL DISTANCE OF ANY TWO ADJACENT VENT SHALL BE NOT MORE THAN 10000MM AND V1 AND V2 SHALL BEABOUT 180° APART.

Project : Tank Modification for the Installation of Internal Floating Roof

Description : ORIENTATION (TK-09 & TK-10)

Drawing No.: 08020.300.E511.06-01 Page 2 of 2

CEYLON PETROLEUM STORAGE TERMINALS LIMITED
MUTHURAJAWELA TERMINAL

08020.300.E511.06-02

GRADE OF QUALIFICATION: CLASS A	中华人民共和国 建设部工程设计 甲级证书011102-sj

会签专业 CONTRIBUTED	签 字 SIGN.	日 期 DATE	会签专业 Concurrent	签 字 SIGN.	日 期 DATE

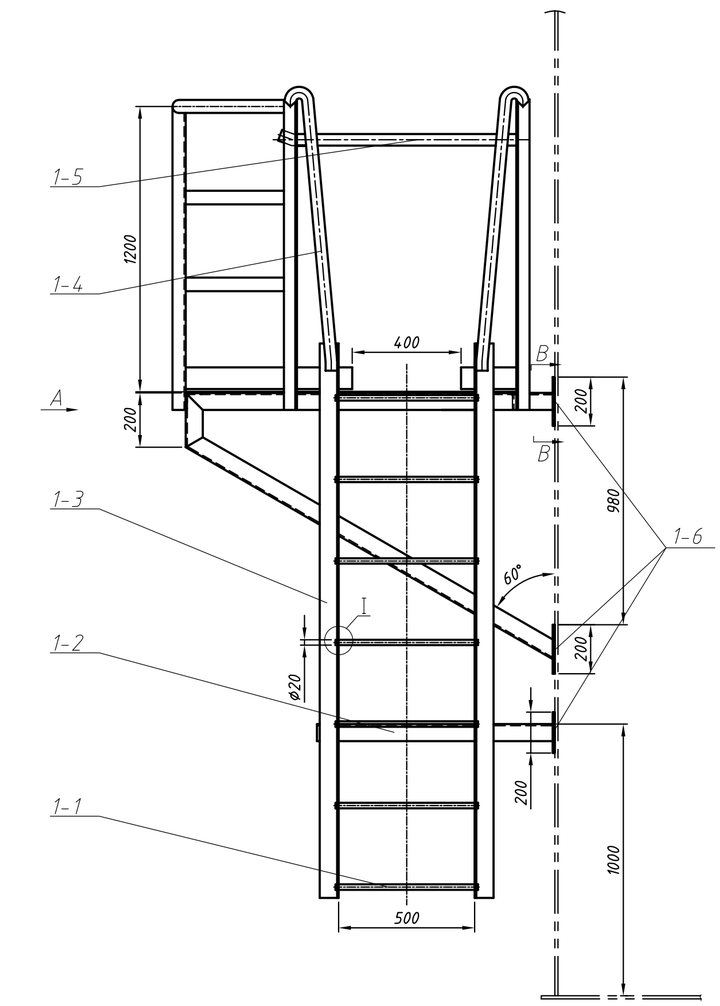

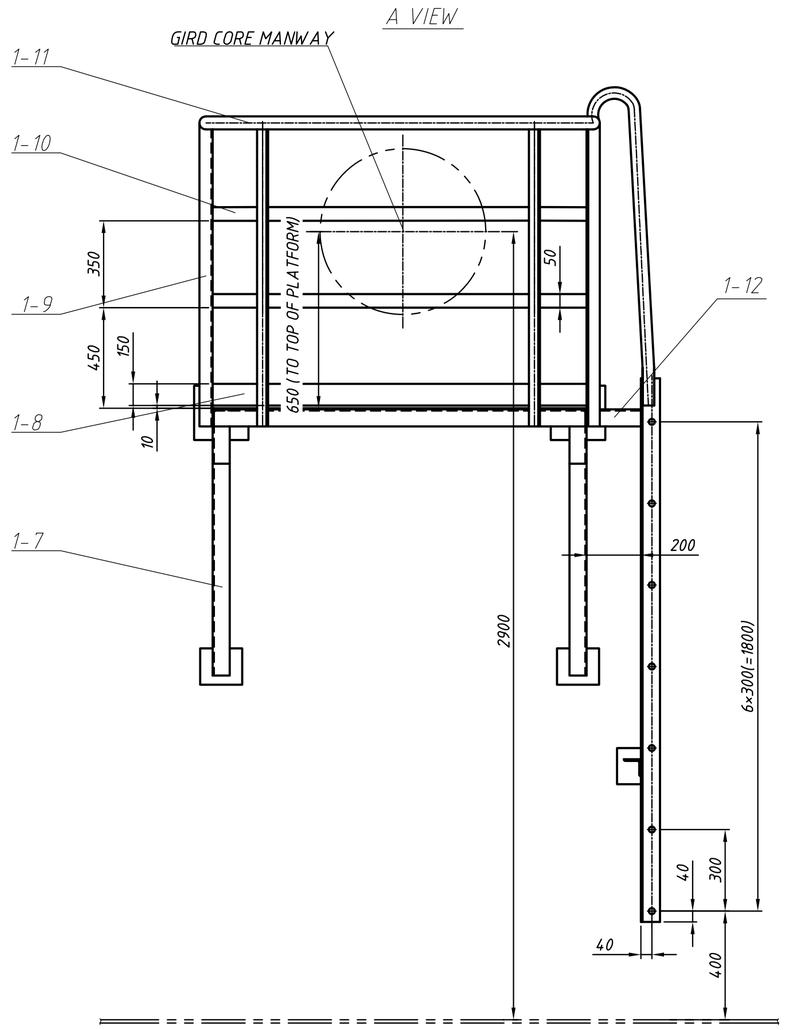

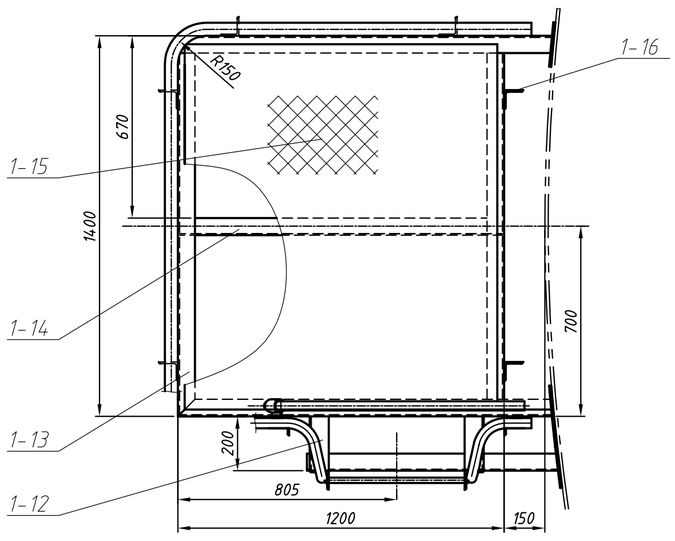

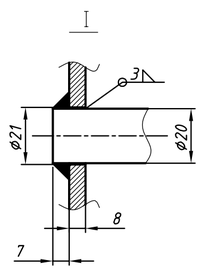

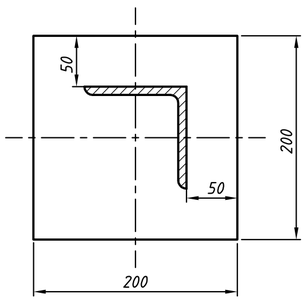

BORE 12.5
CUT SIDE 25
OTHERS

DETAIL OF SAFEGATE

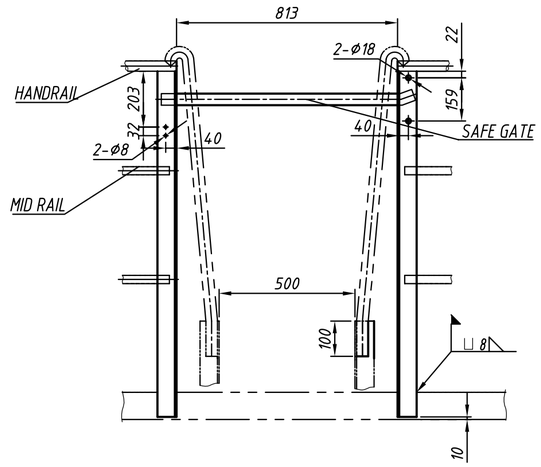

NOTE:
ALL FILLET WELDS LENGTH SHALL BE TAKEN AS THE THICKNESS OF THINNER WELDMENT IF NOT SPECIFIED ON THE DRAWING.

PART NO. 件号	DWG.OR STD. NO. 图号或标准号	DESCRIPTION 名称	Q'TY 数量	MATERIAL 材料	单 SIN. 质量 MASS(Kg)	总 TOT. 质量 MASS(Kg)	REMARK 备注
1-16		STANCHION ∠50×50×6 L=250	2	Q235-A	0.9	1.8	
1-15		FLOOR GRATING G 325/30/100 F G 1360×1160	1.68m²	Q235-A		80.8	GALVANIZED
1-14		ANGLE L 100X100X8 L=1200	1	Q235-A		14.5	
1-13		ANGLE L 100X100X8 L=1400	2	Q235-A	17	34	
1-12		ANGLE L 100X100X8 L=200	2	Q235-A	3.2	6.4	
1-11		HANDRAIL PIPE 1-1/4"	L≈3000	Q235-A		9.2	GALVANIZED
1-10		MID RAIL □50×6 L≈3250	2	Q235-A	7.65	15.3	
1-9		STANCHION ∠50×50×6 L≈1200	6	Q235-A	5.4	32.4	
1-8		TOE PLATE □150×6	L≈4800	Q235-A		32.9	
1-7		ANGLE L 100X100X8 L≈4250	2	Q235-A	52.3	104.6	
1-6		PAD □200×200×8	5	Q235-A	2.5	12.5	
1-5	04.028	SAFE GATE	1	COMPONENTE		1.26	
1-4		HANDRAIL PIPE 1-1/4" L≈1300	2	Q235-A	3.22	6.44	GALVANIZED
1-3		LADDER GIRDER L 100X100X8 L=2000	2	Q235-A	24.6	49.2	
1-2		SUPPORT ANGLE L 100X100X8 L=950	1	Q235-A		11.7	
1-1		RUNG Ø20 L=530	7	Q235-A	1.3	9.1	

明 细 表 DETAIL DESCRIPTION

Project : Tank Modification for the Installation of Internal Floating Roof(Tank No. TK-09 & TK-10)

Description : MANWAY LADDER & PLATFORM

Drawing No.: 08020.300.E511.06-02

Assembly Drawing No.: 08020.300.E511.01

CEYLON PETROLEUM STORAGE TERMINALS LIMITED
MUTHURAJAWELA TERMINAL

08020.300.E511.06-03

GRADE OF (QUALIFICATION):	CLASS A
中华人民共和国 建设部工程设计 甲级证书011102-sj	

日 期 DATE	日 期 DATE	会签专业 Counersigned	会签专业(OUTSIDE)(IND)
签 字 SIGN.	签 字 SIGN.		

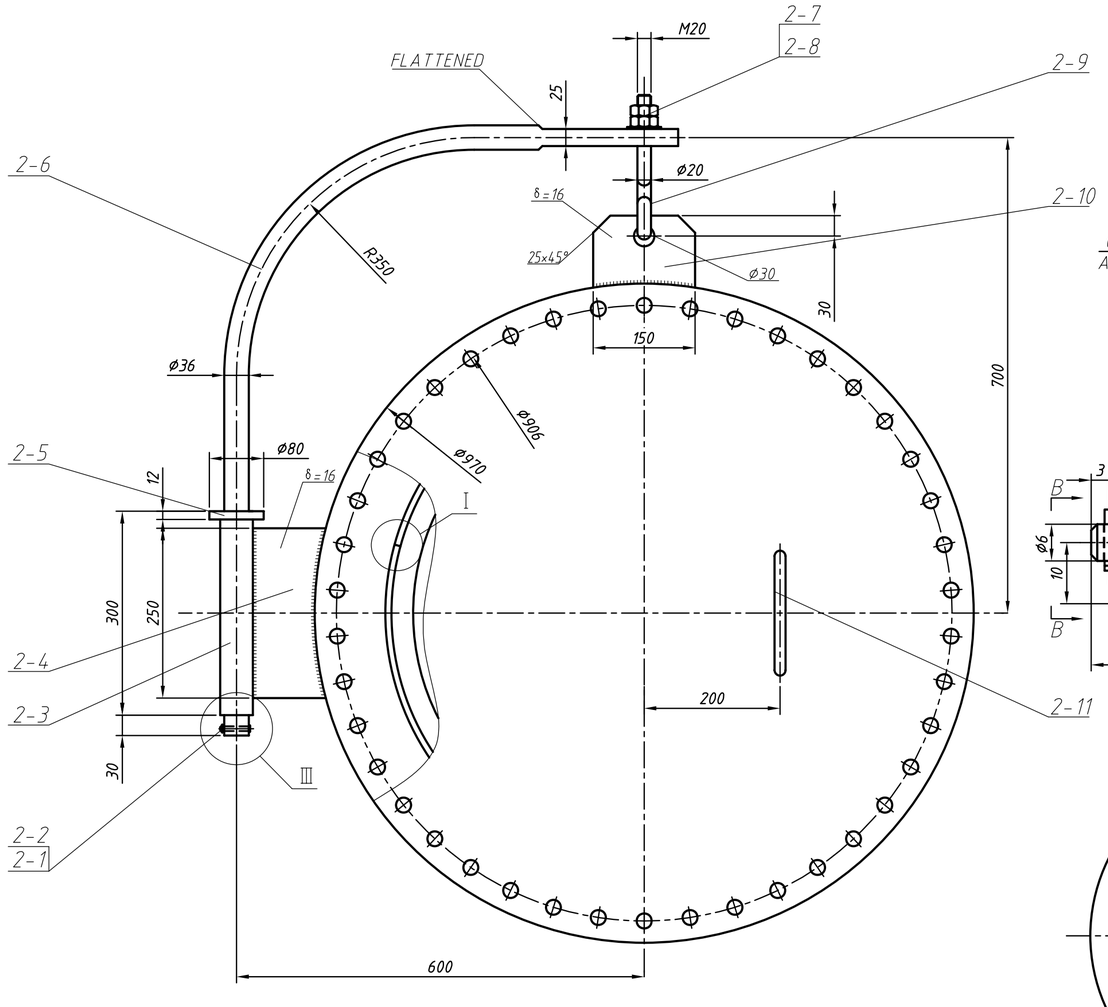

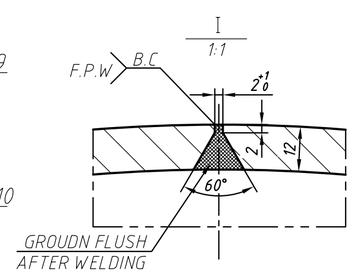

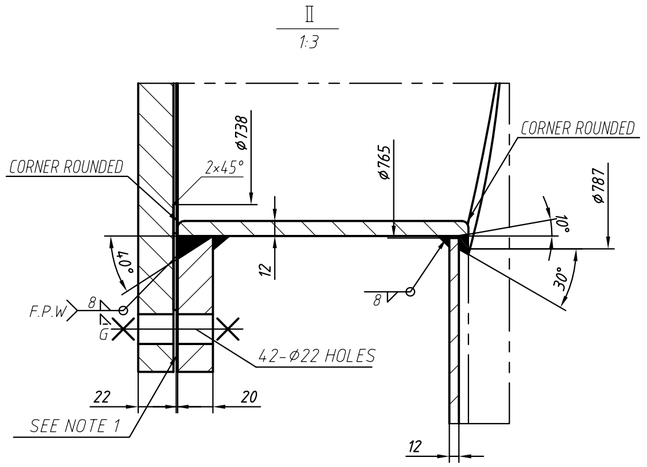

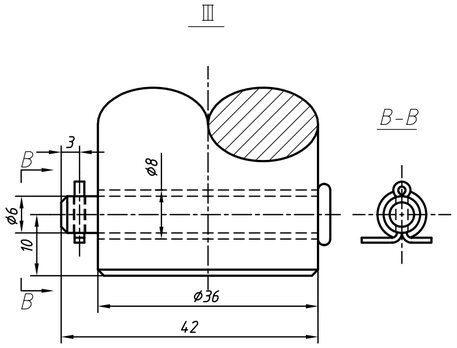

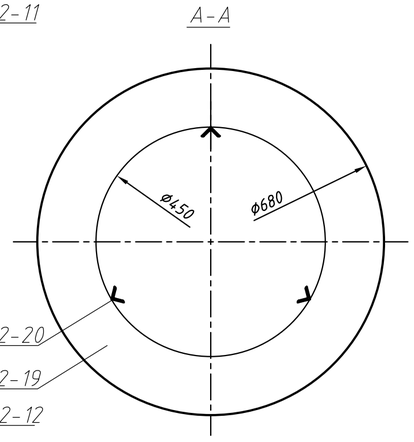

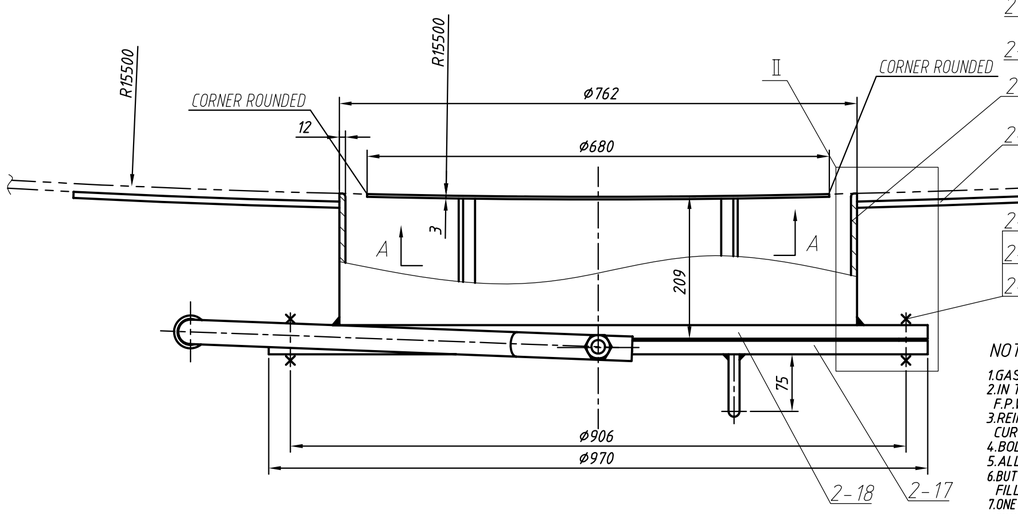

NOTE:

1. GASKETED FACE SHALL BE MACHINE-FINISHED. 6.3
2. IN THE DRAWING MARK B.C MEANS THE BACK CHIPPING. F.P.W MEANS THE FULL PENETRATION WELDING.
3. REINFORCING PLATE SHALL BE SHAPED TO SUIT TANK SHELL CURVATURE.
4. BOLT HOLES SHALL STRADDLE THE FLANGE VERTICAL CENTER LINE.
5. ALL FILLET WELDING SHALL BE OF MIN. TWO PASSES.
6. BUTT-WELDS SHALL BE EXAMINED BY RADIOGRAPHIC METHOD AS PER API 650 FILL WELD SHALL BE EXAMINED BY MAGNETIC PARTICLE AS API 650
7. ONE LAYER OF PROTECTING PAINT OF ZINC RICH EPOXY (50μm IN D.F.T) SHALL BE APPLIED ON ALL THE SURFACES WHICH WILL BE EXPOSED TO THE AIR AFTER MANUFACTURING, WITH THE INTENDED SURFACE SAND BLASTED TO SA2.5.

PART NO. 件号	DWG.OR STD. NO. 图号或标准号	DESCRIPTION 名称	Q'TY 数量	MATERIAL 材料	单 SIN. 质量 MASS(Kg)	总 TOT. 质量 MASS(Kg)	REMARK 备注
2-20		ANGLE L30×30×4 L=205	3	Q235-A	0.42	12.6	
2-19		BLIND ø680 δ=3	1	Q235-A		9.9	
2-18		FLANGE PL.20Xø970Xø762	1	16MnR		47	
2-17		BLIND ø970 δ=22	1	16MnR		127	
2-16		GASKET ø885^{OD}Xø750^{ID}δ=3	3	N.A			EXT.2
2-15	ASME B 18.2.2-1987(R1999)	NUT 3/4"-10UNC	88	A194Gr.2H	0.028	2.5	EXT.4
2-14	ASME B 18.2.1-1996	STUD BOLT 3/4"-10UNCX105^{L}	44	A193Gr.B7	0.19	8.5	EXT.2
2-13		REINF.PL PL12Xø1545^{OD}Xø765^{ID}	1	Q345R		133.3	
2-12		PIPE DN738 δ=12 L=200	1	16MnR		44.8	
2-11		HANDER ø16 L=312	2	Q235-A	0.55	1.1	
2-10		LUG δ=16	1	Q235-A		1.8	
2-9		POTHOOK	1	Q235-A		0.77	
2-8		WASHER	1	HV			
2-7	ASME B 18.2.2-1987(R1999)	NUT 3/4"-10UNC	2	A194Gr.2H			
2-6		DAVIT ø36	1	Q235-A		12.2	
2-5		SUPPORT RING ø80/ø38 δ=12	1	Q235-A		0.37	
2-4		PLATE δ=16	1	Q235-A		3.5	
2-3		PIPE 1-1/2" Sch80 L=288	1	20		3.3	
2-2	GB/T 91	SLEEVE 1.6×15	1				
2-1	GB/T 882	SLEEVE 6×42	1				

明 细 表 DETAIL DESCRIPTION

Project : Tank Modification for the Installation of Internal Floating Pan(Tank No. TK-09 & TK-10)

Description : SHELL MANHOLE WITH BLIND (M5~6)

Drawing No.. : 08020.300.E511.06-03

Assembly Drawing No.: 08020.300.E511.06-01

CEYLON PETROLEUM STORAGE TERMINALS LIMITED
MUTHURAJAWELA TERMINAL

08020.400.E511.06-04

GRADE OF (QUALIFICATION): CLASS A

中华人民共和国 建设部工程设计 甲级证书011102-sj

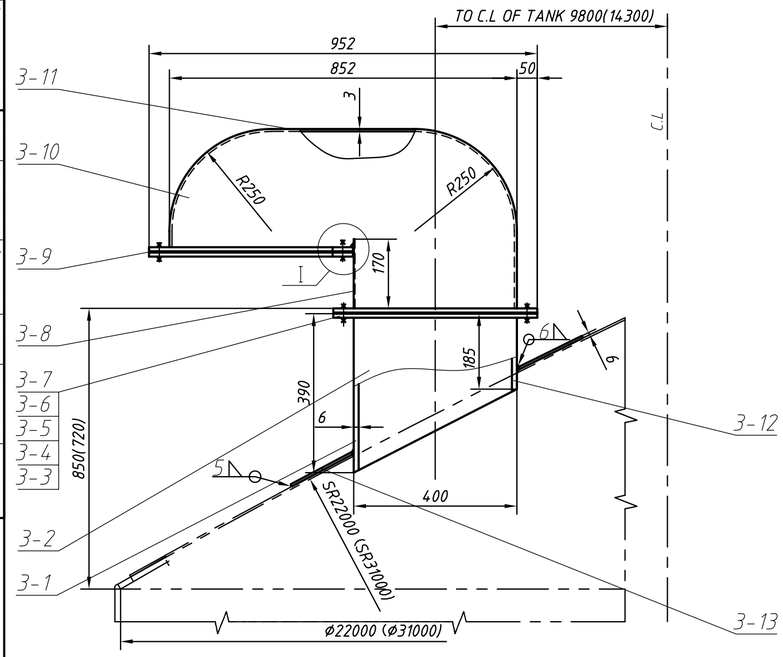

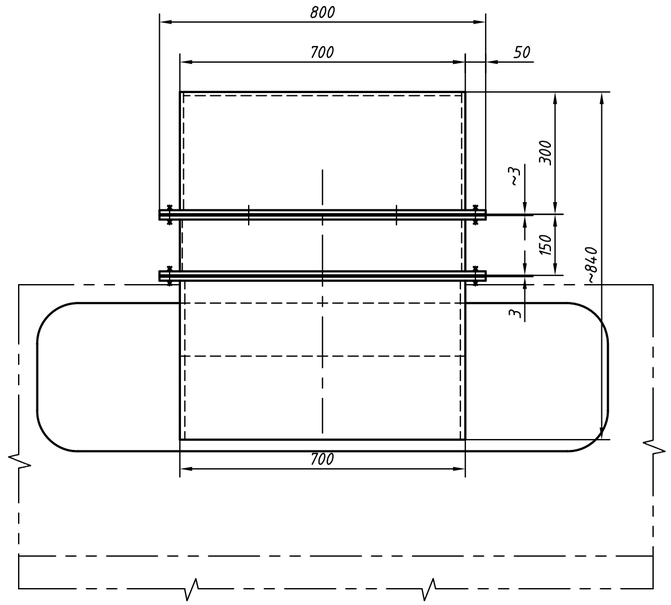

DETAIL OF ''3-11''

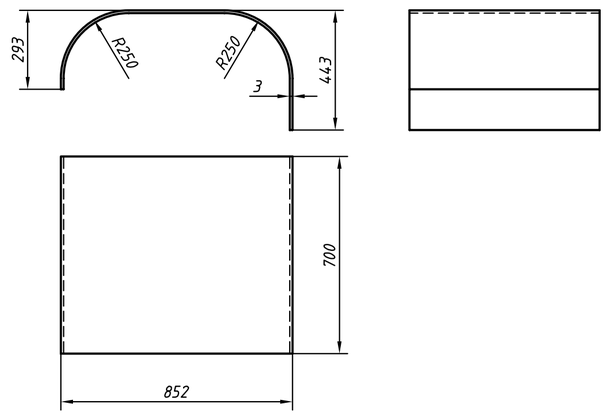

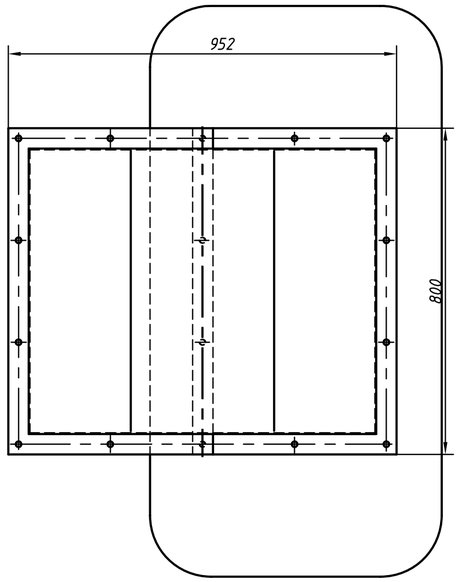

DETAIL OF '' 3-3''&''3-7''&''3-6''

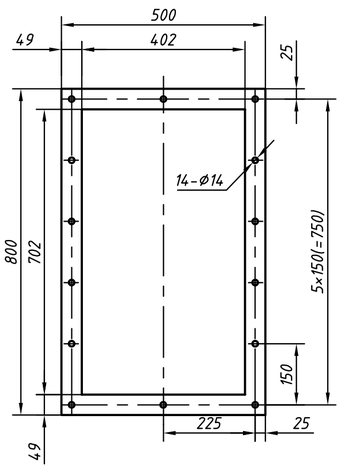

DETAIL OF ''3-13''

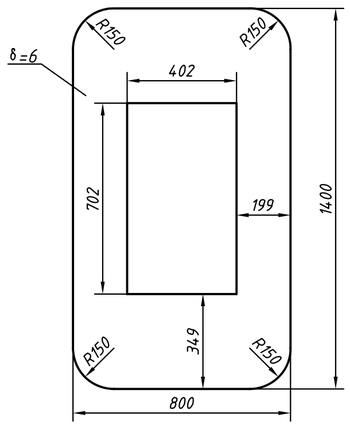

DETAIL OF "I"

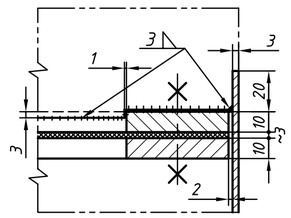

NOTE:

1. THIS PART DWG. IS OF PETROL LOADING TANK TK31~32 (INSIDE DIAMETER IS Ø22000), AND DATA IN BRACKET IS OF PETROL STORAGE TANK TK11~13 (INSIDE DIAMETER IS Ø31000).
2. THE HOLES IN THE TWO STEEL WIRE NET SHALL BE COINCIDENT WITH EACH OTHER.
3. "3-6" SHOULD FIT WITH "3-3"&"3-7",
4. ADOPT "TIG" BETWEEN ALUMINIUM ALLOYS.
5. "3-7","3-8","3-10","3-11" CAN BE MADE OF "Q235-A" OR "LF21Y2", PLEASE VENDOR BID SEPARATELY.
6. ONE LAYER OF PROTECTING PAINT OF ZINC RICH EPOXY (50μm IN D.F.T) SHALL BE APPLIED ON ALL THE SURFACES WHICH WILL BE EXPOSED TO THE AIR AFTER MANUFACTURING, WITH THE INTENDED SURFACE SAND BLASTED TO SA2.5.

PART NO. 件号	DWG.OR STD. NO. 图号或标准号	DESCRIPTION 名称	Q'TY 数量	MATERIAL 材料	单 SIN.	总 TOT. 质量 MASS(Kg)	REMARK 备注
3-13		REINFORCING PAD δ=6	1	Q235-B		39.5	
3-12		PLATE 4 δ=6	1	Q235-A		5.9	
3-11		TOP PLATE δ=3	1	LF21Y2(Q235-A)		7.9(22.7)	
3-10		SIDE PLATE 2 δ=3	2	LF21Y2(Q235-A)	2.3(6.6)	4.6(13.2)	
3-9	GB/T 5330-1985	STEEL WIRE NET GF1W 12.5/1.8	2	S.S	1.1	2.2	TWO LAYERS
3-8		SIDE PLATE 1 700×173×3	1	LF21Y2(Q235-A)		1(2.9)	
3-7		FLANGE 2 δ=10	3	LF21Y2(Q235-A)	3.2(9.3)	9.6(27.9)	
3-6		GASKET	1	N.A.			
3-5	ASME B 18.2.2-1987(R1999)	NUT 1/2"-9UNC	30	A194Gr.2H			EXT.2
3-4	ASME B 18.2.1-1996	BOLT 1/2"-9UNC×40	30	A193Gr.B7			EXT.2
3-3		FLANGE 1 δ=10	1	Q235-A		9.25	
3-2		PLATE 2 δ=6	2	Q235-A	5.5	11	
3-1		PLATE 1 δ=6	1	Q235-A		13	

Project : Tank Modification for the Installation of Internal Floating Roof (Tank No. TK-09 & TK-10)

Description : REMOVABLE FIXED ROOF CIRCULATION VENT

Drawing No. : 08020.400.ES511.06-04

Assembly Drawing No.: 08020.400.E511.06-01

CEYLON PETROLEUM STORAGE TERMINALS LIMITED
MUTHURAJAWELA TERMINAL

08020.400.E511.06-05

GRADE OF QUALIFICATION: CLASS A

中华人民共和国 建设部工程设计 甲级证书011102-si

会签专业 COUNTERSIGNED	签 字 SIGN.	日 期 DATE	会签专业 Countersigned	签 字 SIGN.	日 期 DATE

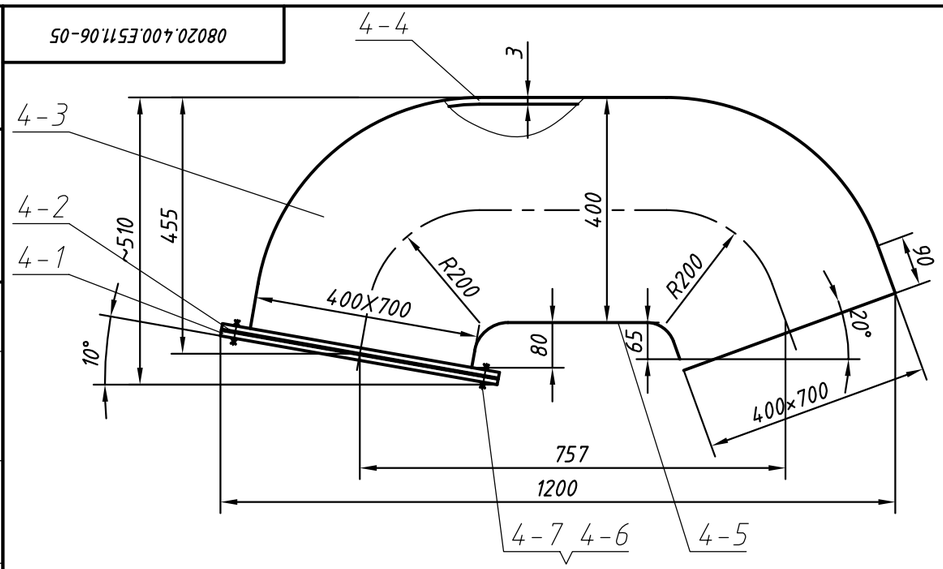

DETAIL OF INSTALLATION

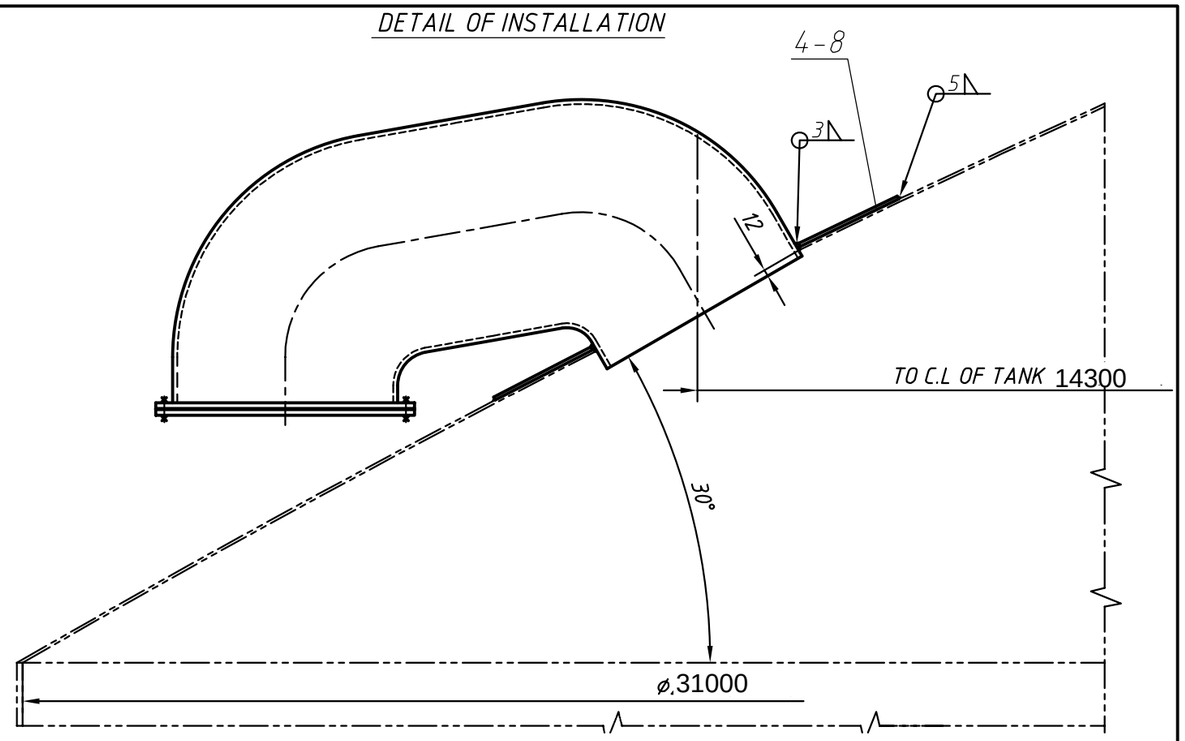

DETAIL OF "4-4"

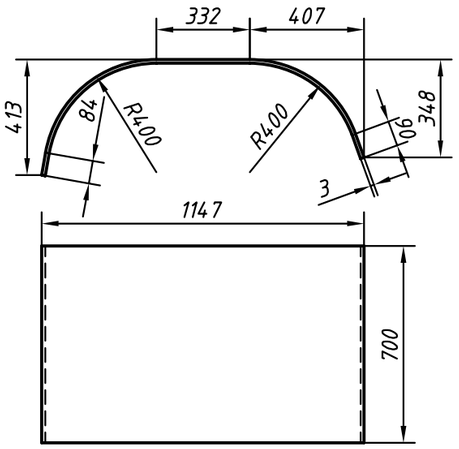

DETAIL OF "4-5"

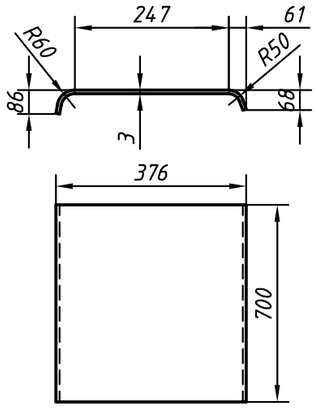

DETAIL OF "4-1"

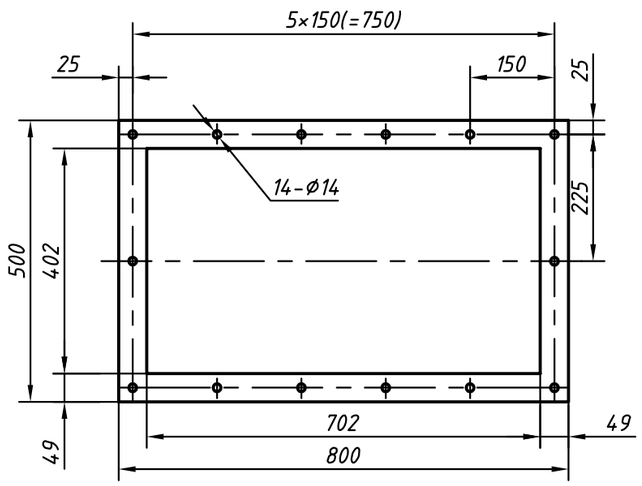

DETAIL OF "4-8"

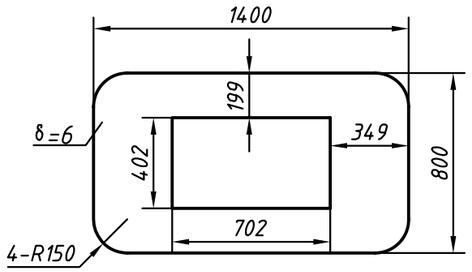

NOTE:

1 THE HOLES IN THE TWO STEEL WIRE NET SHALL BE COINCIDENT WITH EACH OTHER.

2 ONE LAYER OF PROTECTING PAINT OF ZINC RICH EPOXY (50μm IN D.F.T) SHALL BE APPLIED ON ALL THE SURFACES WHICH WILL BE EXPOSED TO THE AIR AFTER MANUFACTURING, WITH THE INTENDED SURFACE SAND BLASTED TO SA2.5.

PART NO. 件号	DWG.OR STD. NO. 图号或标准号	DESCRIPTION 名称	Q'T'Y 数量	MATERIAL 材料	单 SIN.	总 TOT.	REMARK 备注
					质量 MASS(Kg)		
4-8		REINFORCING PAD δ=6	1	Q235-B		39.5	
4-7	ASME B 18.2.2-1987(R1999)	NUT 1/2"-13UNC	16	A194Gr.2H			EXT.2
4-6	ASME B 18.2.1-1996	BOLT 1/2"-13UNCX40	16	A193Gr.B7			EXT.2
4-5		BOTTOM PLATE δ=3	1	Q235-A		7.5	
4-4		TOP PLATE δ=3	1	Q235-A		23.5	
4-3		SIDE PLATE δ=3	2	Q235-A	9.5	19	
4-2	GB/T 5330-1985	STEEL WIRE NET GF1W 12.5/1.8	2	S.S	1.1	2.2	TWO LAYERS
4-1		FLANGE δ=10	2	Q235-A	9.2	18.4	

明 细 表 DETAIL DESCRIPTION

PART NO. 件号	DESCRIPTION 名称	MATERIAL 材料	MASS 质量(Kg)	SCALE 比例	DWG. NO. 所在图号	ASSEMBLY DWG. NO. 装配图号
4	ROOF CIRCULATION VENT	COMPONENTS	110		08020.400.E511.06-05	08020.400.E511.06-01

Project : Tank Modification for the Installation of Internal Floating Roof (Tank No. TK-09 & TK-10)

Description: ROOF CIRCULATION VENT(V1~10)

Drawing No.: 08020.400.E511.06-05

Assembly Drawing No.: 08020.400.ES11.06-01

CEYLON PETROLEUM STORAGE TERMINALS LIMITED
MUTHURAJAWELA TERMINAL

08020.300.E511.06-06

GRADE OF QUALIFICATION: CLASS A

中华人民共和国建设部工程设计甲级证书011102-sj

会签专业 CONTENS(SIGN)	签 字 SIGN.	日 期 DATE	会签专业 Countersigned	签 字 SIGN.	日 期 DATE	

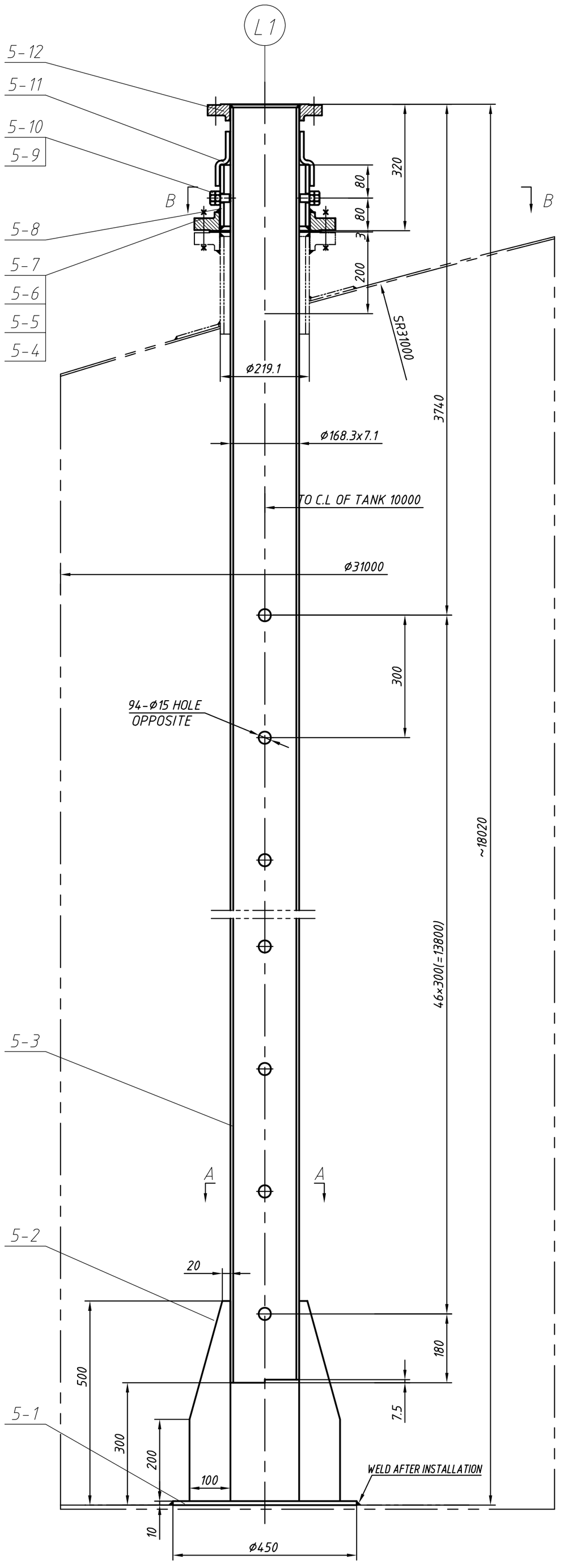

A-A

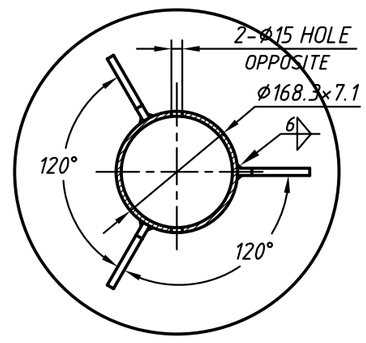

B-B

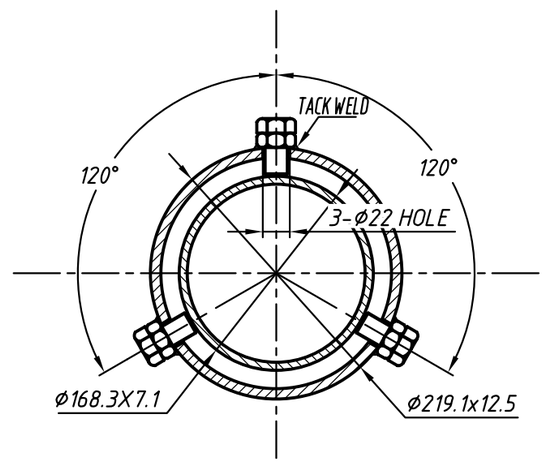

DETAIL OF PIPE CONNECTION
NO SCALE

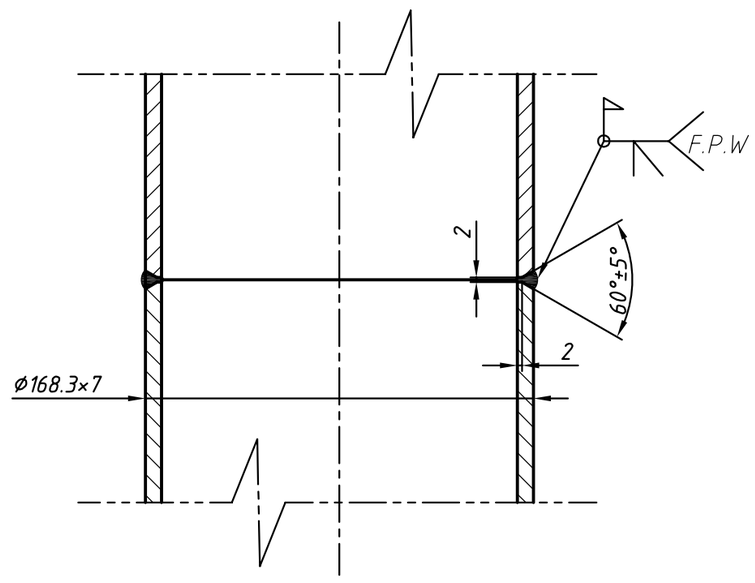

NOTE :

1. ALL FILLET WELDS HEIGHT SHALL BE TAKEN AS THE THICKNESS OF THINNER WELD IF NOT SPECIFIED ON THE DRAWINGS . FLANGE WELDED TYPE SHALL BE ACCORDING TO CORRESPONDING FLANGE STANDARD.
2. NOZZLE BOLT HOLES SHALLL STRADDLE CENTER OF VESSEL .
3. PIPE "5-3" CAN BE WELDED BY SEVERAL PIPES .BUT THE VERTICAL TOLERANCE MUST BE LESS THAN 3mm ALONG THE TOTAL LENGTH.
4. PIPE "5-3" MUST BE COLLIMATED ,AND NO REDUCER AND CURVE IF IT IS WELDED BY SEVERAL PIPES.
5. MUST BE NO BURR AND BE SLICK ON INSIDE SURFACE OF PIPE "5-3" , AND THE WELDING AND OPENINGS MUST BE PURGED CLEAR.
6. MARKING
"F.P.W":THE FULL PENETRSTION WELDS

PART NO. 件号	DWG.OR STD. NO. 图号或标准号	DESCRIPTION 名称	Q'TY 数量	MATERIAL 材料	单 SIN. 质量 MASS(Kg)	总 TOT. 质量 MASS(Kg)	REMARK 备注
5-12	ASME B16.5-2003	FLANGE 150# 6" SO/RF	1	16Mn II		7.7	
5-11		SEAL SLEEVE L=200	1	OIL-RESISTANT RUBBER			
5-10	ASME B 18.2.2-1987(R1999)	NUT 3/4"-10UNC	3	A194Gr.2H			
5-9	ASME B 18.2.1-1996	BOLT 3/4"-10UNCX55S	3	A193Gr.B7			
5-8		JACKET PIPE 8"Sch80 L=150	1	20		9.7	
5-7	ASME B 18.2.2-1987(R1999)	HEX NUT 3/4"-10UNC	18	A194Gr.2H	0.028	0.5	EXT.2
5-6	ASME B 18.2.1-1996	STUD BOLT 3/4"-10UNCX105	10	A193Gr.B7	0.17	1.7	EXT.2
5-5	ASME B 16.21-2005	GASKET $279^{OD}/219^{ID}$ δ=3.2	3	OEM139B			EXT.2
5-4	ASME B 16.5-2003	FLANGE 150# 8" SO RF	1	16Mn II		12.3	
5-3		PIPE 6" Sch40 L=17720	1	20		500	
5-2		PLATE δ=10	3	Q235-A	2.9	8.7	
5-1		PAD δ=10	1	Q235-A		12.5	

Project : Tank Modification for the Installation of Internal Floating Roof (Tank No. TK-09 & TK-10)

Description : STILLING WELL FOR RADAR GAUGE LT (L1)

Drawing No.: 08020.300.E511.06-06

Assembly Drawing No.: 08020.300.E511.06-01

CEYLON PETROLEUM STORAGE TERMINALS LIMITED
MUTHURAJAWELA TERMINAL

08020.300.E511.06-07

GRADE OF QUALIFICATION:	CLASS A
中华人民共和国建设部工程设计甲级证书011102-sj	

会签专业 CONTRIBUTED	签 字 SIGN.	日 期 DATE	会签专业 Concurrence	签 字 SIGN.	日 期 DATE

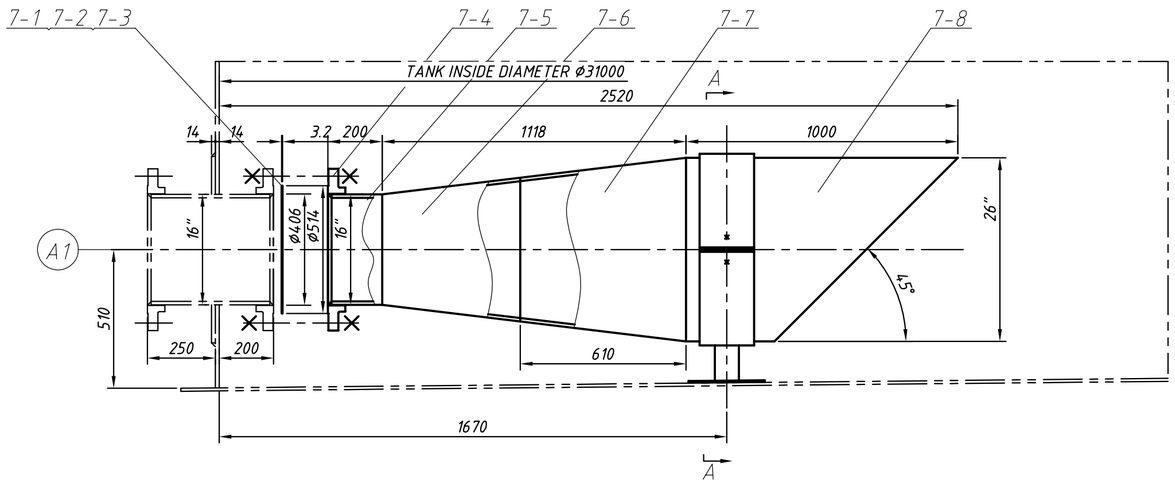

A-A
1:10

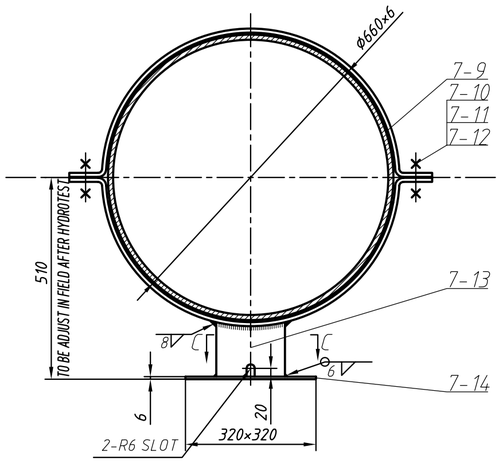

C-C

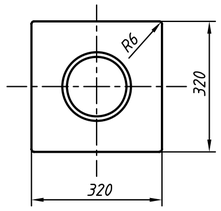

DETAIL OF 7-9

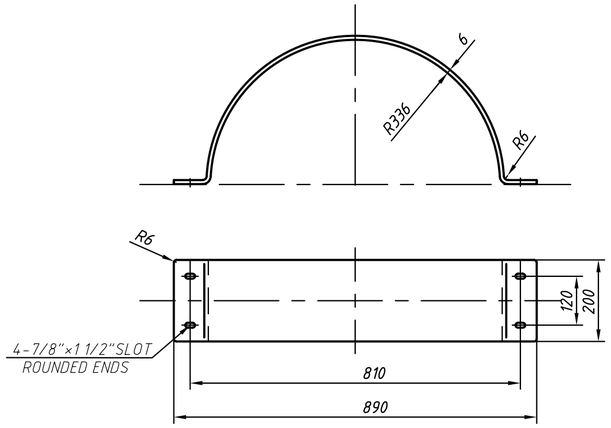

TYPICAL WELD

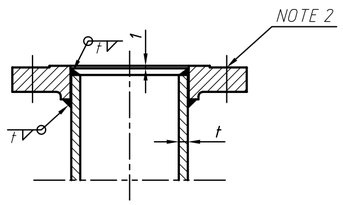

NOTES

1. ALL FILLET WELDING SHALL BE OF MIN, TWO PASSES.
2. ALL MACHINED SURFACE SHALL BE RMS125~250.
3. THE ORIENTATION OF NOZZLE SHALL BE AS PER SPECIALTY PIPING.
4. BOLT HOLES SHALL STRADDLE THE FLANGE CENTER LINE.
5. THE DIMENSION AND LOCATION FOR SUPPORT(MARK 7-13,7-14)SHALL BE ADJUSTED AT SITE.

PART NO. 件号	DWG.OR STD. NO. 图号或标准号	DESCRIPTION 名称	QT'Y 数量	MATERIAL 材料	单 SIN.	总 TOT.	质量 MASS(Kg)	REMARK 备注
7-14		BASE PLATE 320X320 δ=6	1	Q235-A			4.8	
7-13		NOZZLE 8" Sch40 L=165	1	20			6.9	
7-12		GASKET 1056×200 δ=6	2	NEOPRENE RUBBER				
7-11	ASME B 18.2.2-1987(R1999)	HEX NUT 3/4"-10UNC	10	A194Gr.2H				EXT.2
7-10	ASME B 18.2.1-1996	STUD BOLT 3/4"-10UNCX90L	6	A193Gr.B7				EXT.2
7-9		CLAMP δ=6	2	Q235-A	11.5		23	
7-8		NOZZLE NECK 26" δ=6 L=1000	1	20			127.4	
7-7	ASME B16.9-2001	REDUCER 26"×20"- Sch10	1	20			55	
7-6	ASME B16.9-2001	REDUCER 20"×16"- Sch10	1	20			30.5	
7-5		NOZZLE NECK 16" Sch30 L=192	1	API 5L			18.8	
7-4	ASME B16.5-2003	FLANGE 150# 16" SO RF	1	16MnⅡ			45.5	
7-3	ASME B 18.2.2-1987(R1999)	HEX NUT 1"-8UNC	34	A194Gr.2H				EXT.2
7-2	ASME B 18.2.1-1996	STUD BOLT 1"-8UNCX160L	18	A193Gr.B7				EXT.2
7-1	ASME B 16.21-2005	GASKET $514^{0.0}/406^{+0.1}$ δ=3.2	3	OEM139B				EXT.2

Project : Tank Modification for the installation of Internal Floating Pan(Tank No. TK-09 & TK-10)

Description : INLET (A1)

Drawing No.: 08020.300.E511.06-07

Assembly Drawing No.: 08020.300.E511.06-01

CEYLON PETROLEUM STORAGE TERMINALS LIMITED
MUTHURAJAWELA TERMINAL

08020.300.E511.06-08

GRADE OF QUALIFICATION: CLASS A

中华人民共和国建设部工程设计甲级证书011102-sj

会签专业 CONTRIBUTED	签 字 SIGN.	日 期 DATE	会签专业 Concurrence	签 字 SIGN.	日 期 DATE

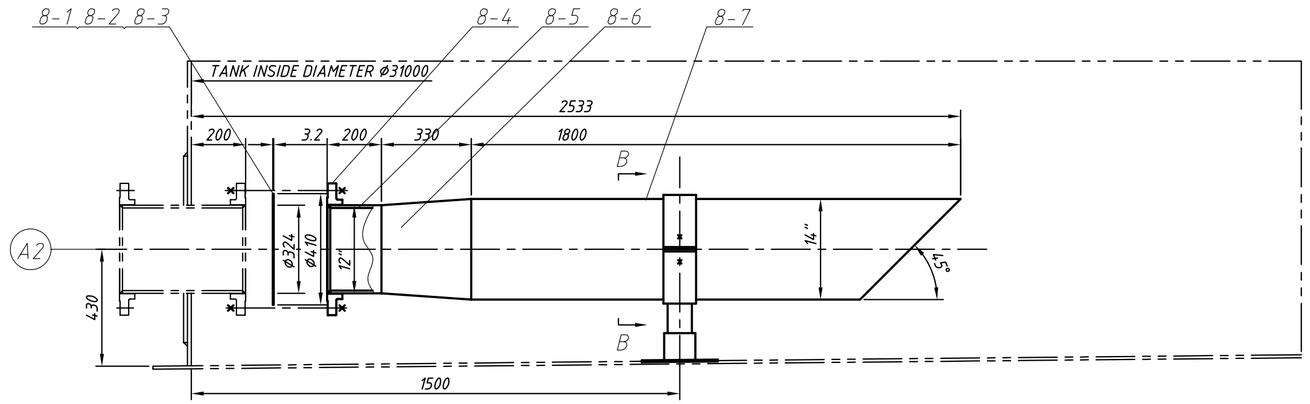

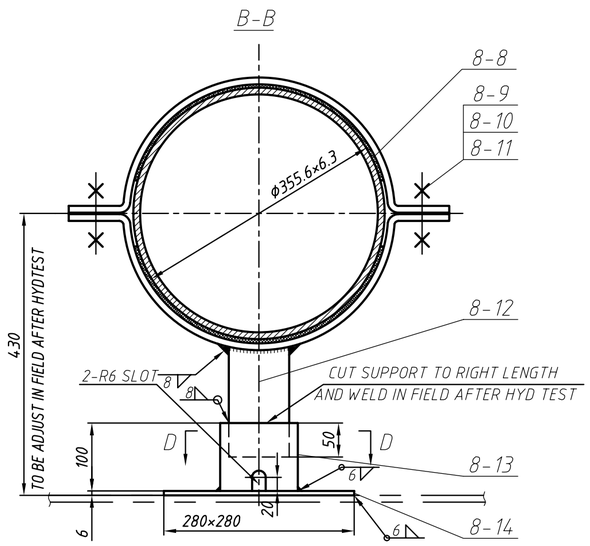

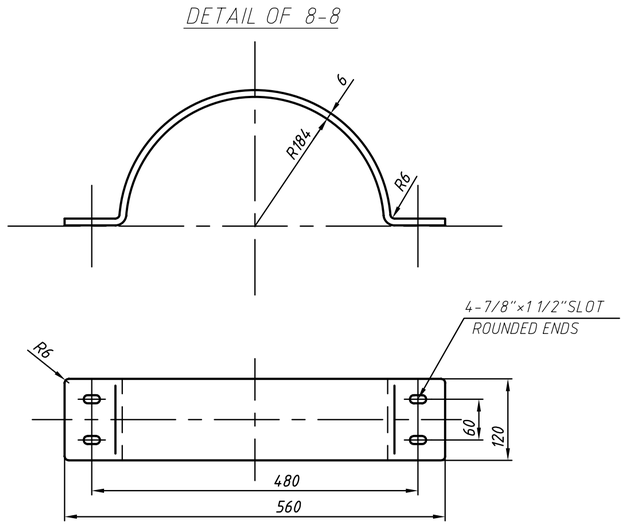

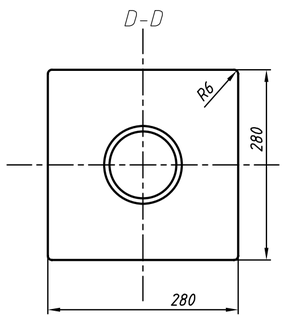

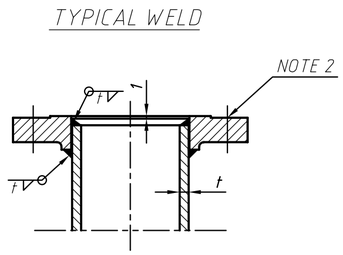

NOTES

1. ALL FILLET WELDING SHALL BE OF MIN. TWO PASSES.
2. ALL MACHINED SURFACE SHALL BE RMS125~250.
3. THE ORIENTATION OF NOZZLE SHALL BE AS PER SPECIALTY PIPING.
4. BOLT HOLES SHALL STRADDLE THE FLANGE CENTER LINE.
5. THE DIMENSION AND LOCATION FOR SUPPORT(MARK 8-12,8-13,8-14)SHALL BE ADJUSTED AT SITE.

PART NO. 件号	DWG.OR STD. NO. 图号或标准号	DESCRIPTION 名称	Q'T'Y 数量	MATERIAL 材料	单 SIN.	总 TOT. 质量 MASS(Kg)	REMARK 备注
8-14		BASE PLATE 280X280 δ=6	1	Q235-A		3.7	
8-13		SUPPORT PIPE 4" Sch120 L=100	1	20		2.8	
8-12		NOZZLE 3' Sch80 L=180	1	20		3.11	
8-11		GASKET 578×120 δ=6	2	NEOPRENE RUBBER			
8-10	ASME B 18.2.2-1987(R1999)	HEX NUT 3/4"-10UNC	10	A194Gr.2H			EXT.2
8-9	ASME B 18.2.1-1996	STUD BOLT 3/4"-10UNCX90L	6	A193Gr.B7			EXT.2
8-8		CLAMP δ=6	2	Q235-A	4.3	8.6	
8-7		NOZZLE NECK 14" Sch30L=1800	1	API 5L		153.5	
8-6	ASME B16.9-2001	REDUCER 14"×12"- Sch10	1	20		17.2	
8-5		NOZZLE NECK 12" Sch30L=192	1	API 5L		13.1	
8-4	ASME B16.5-2003	FLANGE 150# 12" SO RF	1	16MnⅡ		27.4	
8-3	ASME B 18.2.2-1987(R1999)	HEX NUT 7/8"-9UNC	26	A194Gr.2H			EXT.2
8-2	ASME B 18.2.1-1996	STUD BOLT 7/8"-9UNCX140L	14	A193Gr.B7			EXT.2
8-1	ASME B 16.21-2005	GASKET $410^{OD}/324^{ID}$ δ=3.2	3	OEM139B			EXT.2

Project : Tank Modification for the Installation of Internal Floating Pan (Tank No. TK-09 & TK-10)

Description : CIRCULATION (A2)

Drawing No.: 08020.300.E511.06-08

Assembly Drawing No. : 08020.300.E511.06-01

CEYLON PETROLEUM STORAGE TERMINALS LIMITED
MUTHURAJAWELA TERMINAL

GRADE OF QUALIFICATION:	CLASS A
中华人民共和国建设部工程设计甲级证书011102-sj	

08020.300.E511.06-09

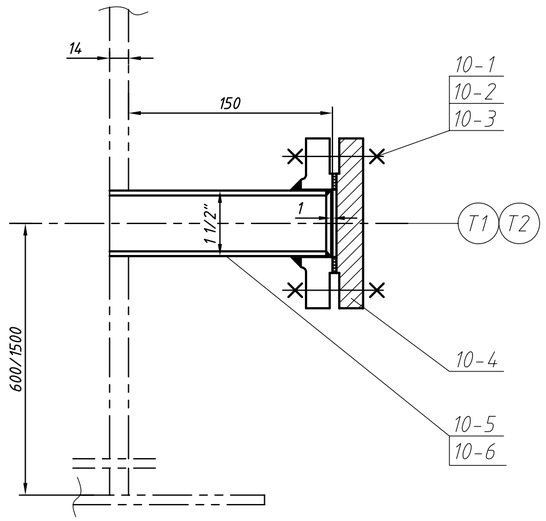

NOTES

1. ALL FILLET WELDING SHALL BE OF MIN, TWO PASSES.
2. ALL MACHINED SURFACE SHALL BE RMS125~250.
3. THE ORIENTATION OF NOZZLE SHALL BE AS PER SPECIALTY PIPING.
4. BOLT HOLES SHALL STRADDLE THE FLANGE CENTER LINE.
5. MARKING:"F.P.W":THE FULL PENETRATION WELDS.

I
1:2

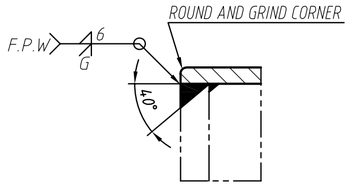

TYPICAL WELD

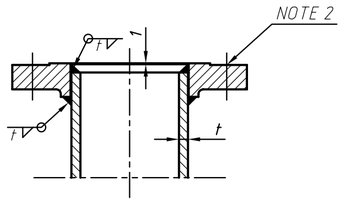

PART NO. 件号	DWG.OR STD. NO. 图号或标准号	DESCRIPTION 名称	QT'Y 数量	MATERIAL 材料	单 SIN.	总 TOT. 质量 MASS(Kg)	REMARK 备注
10-6	ASME B16.5-2003	FLANGE 150# 1 1/2" SO RF	1	16MnⅡ		1.37	
10-5		NOZZLE NECK 1 1/2"Sch160 L=158	1	20		1.14	
10-4	ASME B16.5-2003	BLIIND FLANGE BL 150# 1 1/2" RF	1	16MnⅡ		1.4	
10-3	ASME B 18.2.2-1987(R1999)	NUT 1/2"-13UNC	10	A194Gr.2H			EXT.2
10-2	ASME B 18.2.1-1996	STUD BOLT 1/2"-13UNC X 90L	6	A193Gr.B7			EXT.2
10-1	ASME B 16.21-2005	GASKET 86 OD X 48 ID δ=3.2	3	OEM139B			EXT.2

PART NO. 件号	DESCRIPTION 名称	MATERIAL 材料	MASS 质量(Kg)	SCALE 比例	DWG. NO. 所在图号	ASSEMBLY DWG. NO. 装配图号
10	SPARE (T)(T2)	COMPONENTS	3.91		08020.300.E511.06-09	08020.300.E511.06-01

Project : Tank Modification for the Installation of Internal Floating Roof (Tank No. TK-09 & TK-10)

Description : SPARE (T) (T2)

Drawing No. : 08020.300.E511.06-09

Assembly Drawing No.: 08020.300.E511.06-01

CEYLON PETROLEUM STORAGE TERMINALS LIMITED
MUTHURAJAWELA TERMINAL

08020.300.E511.06-10

GRADE OF QUALIFICATION: CLASS A

中华人民共和国 建设部工程设计 甲级证书011102-sj

会签专业 COUNTERSIGNED	签 字 SIGN.	日 期 DATE	会签专业 Countersigned	签 字 SIGN.	日 期 DATE

DETAIL OF NOZZLE V

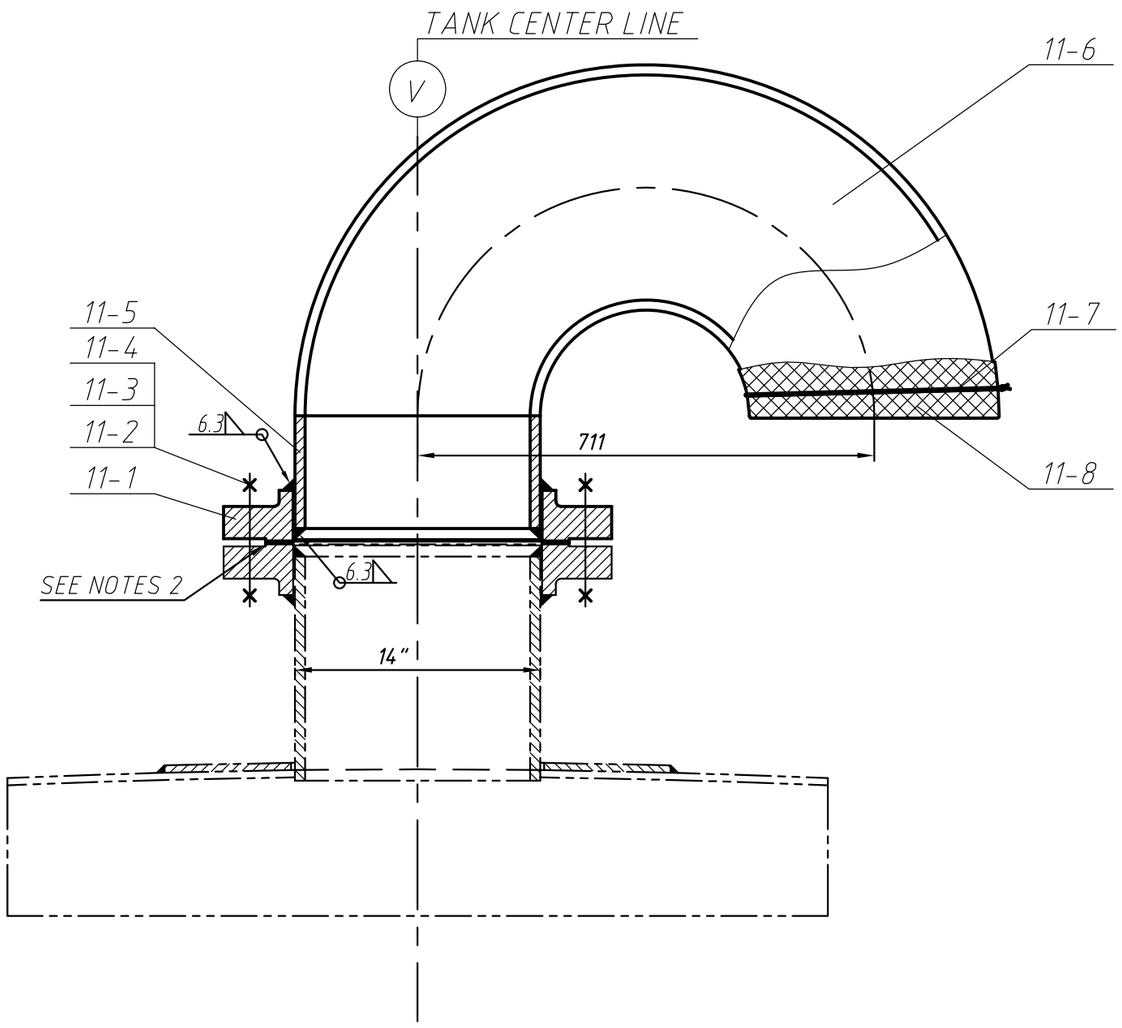

NOTE:

1. ALL FILLET WELDING SHALL BE OF MIN, TWO PASSES.
2. ALL MACHINED SURFACE SHALL BE RMS 125~250
3. BOLT HOLES SHELL STRADDLE THEFLANG CENTER LINE.
4. THE ORIENTATION OF NOZZLE SHALL BE AS PER DWG. 08020.300.E511.06-01.

PART NO. 件号	DWG.OR STD. NO. 图号或标准号	DESCRIPTION 名称	QT'Y 数量	MATERIAL 材料	单 SIN. 质量 MASS(Kg)	总 TOT. 质量 MASS(Kg)	REMARK 备注
11-8	GB/T 5330-1985	TABBY MESH GF1W6.3/1.0 Ø500	1	0Cr18Ni9			
11-7		WIRY Ø2 L=2500	1	0Cr18Ni9			
11-6	ASME B16.9-2001	RETURN 14"-Sch10 SR	1	20		60.7	
11-5		NOZZLE NECK 14"Sch10 L=100	1	20		5.3	
11-4	ASME B 18.2.2-1987(R1999)	HEX NUT 1"-8UNC	26	A194Gr.2H			EXT.2
11-3	ASME B 18.2.1-1996	STUD BOLT 1"-8UNCX135L	14	A193Gr.B7			EXT.2
11-2	ASME B 16.21-2005	GASKET $451^{O.D}/356^{I.D}$ δ=3	3	N.A			EXT.2
11-1	ASME B16.5-2003	FLANGE 150# 14" SO RF	1	16MnⅡ		34.7	

Project : Tank Modification for the Installation of Internal Floating Roof Tank No. TK-09 & TK-10)

Description : VENT (V)

Drawing No. : 08020.300.E511.06-10

Assembly Drawing No.: 08020.300.E511.06-01

CEYLON PETROLEUM STORAGE TERMINALS LIMITED
MUTHURAJAWELA TERMINAL

中华人民共和国建设部工程设计甲级证书011102-sj	GRADE OF QUALIFICATION: CLASS A

会签专业 (OUTFEST/ATD)	签 字 SIGN.	日 期 DATE	会签专业 Countersigned	签 字 SIGN.	日 期 DATE

04.028

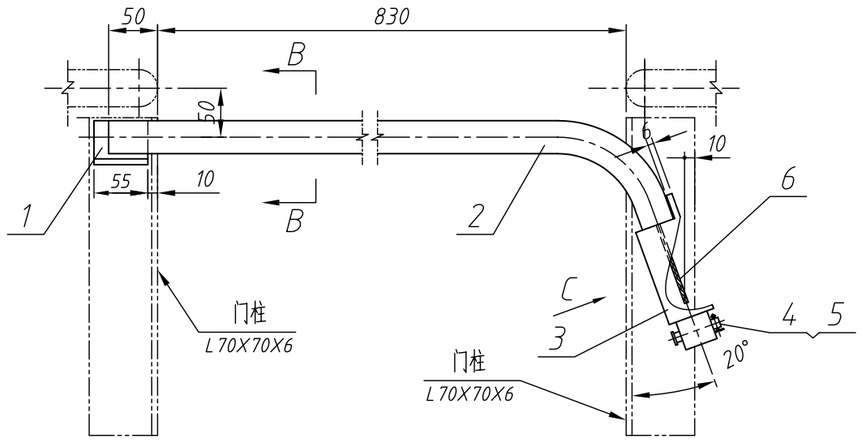

B-B
1:6

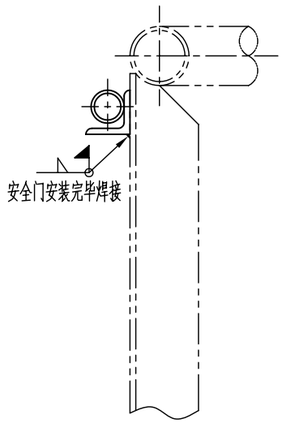

C向
1:6

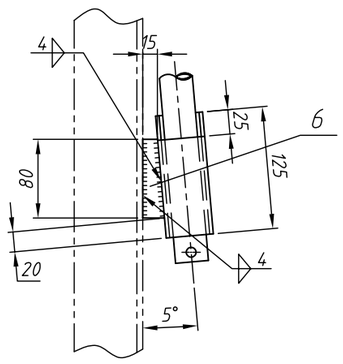

安全挡管详图
DETAIL OF SAFET PIPE

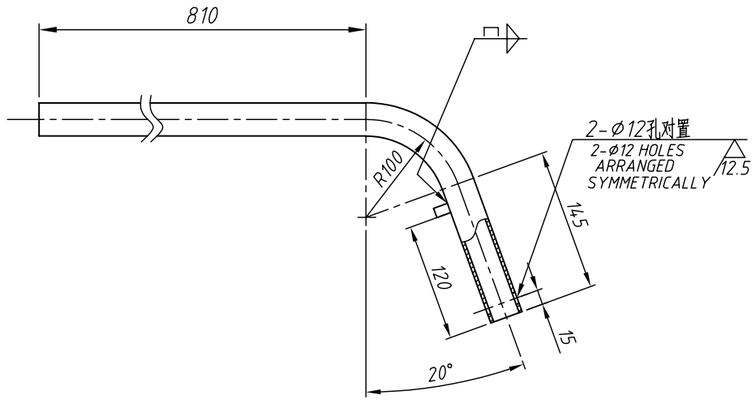

注:
NOTE

1. 该安全门用于设备平台入口处。
   THE EXIT INSTALL ON INLET OF THE EQUIPMENT PLATFORM
2. 套管(件号3)内壁衬1mm厚PVC.
   THE INSIDE SURFACE OF SLEEVE PIPE SHOULD BE LINED WITH 1mmPVC.
3. 安全挡管（件号1）外露部分缠绕玻璃纤维带。
   THE SAFE TUBE OUT OF THE SLEEVE MUST BE WRAPPED WITH GLASS FIBRE WEBBING.
4. 组件重量约为：3.4 Kg.
   WEIGHT OF ASSEMBLY IS 3.4 Kg.

标记规定：MARK STIPULATE

图号	名称

MARK REGULATION: DRAWING NO. NAME

标记示例： 04.028 安全门
MARK SAMPLE: 04.028 EXIT

PART NO. 件号	DWG.OR STD. NO. 图号或标准号	DESCRIPTION 名称	QT'Y 数量	MATERIAL 材料	单 SIN.	总 TOT.	REMARK 备注
					质量 MASS(Kg)		
6		CONNECT 连接板 δ=4	1	Q235-A		0.04	
5	GB/T 91-2000	COTTER PIN 开口销 3.2x32	1	Q235-A			
4	GB/T 882-1986	DOWEL 销子 B10X55	1	Q235-A			
3		SLEEVE 套管 1½"-Sch40	1	20		0.4	
2		SAFET PIPE 安全挡管 1"-Sch40	1	20		2.7	L=1110
1		ANGLE 角钢 L45X45X6	1	Q235-A		0.1	

Project : Tank Modification for the Installation of Internal Floating Pan (Tank No. TK-09 & TK-10)

Description : SAFETY GATE FOR MANWAY LADDER & PLATFORM

Drawing No. : 04.028

Assembly Drawing No.: 08020.300.E511.06-02

CEYLON PETROLEUM STORAGE TERMINALS LIMITED
MUTHURAJAWELA TERMINAL

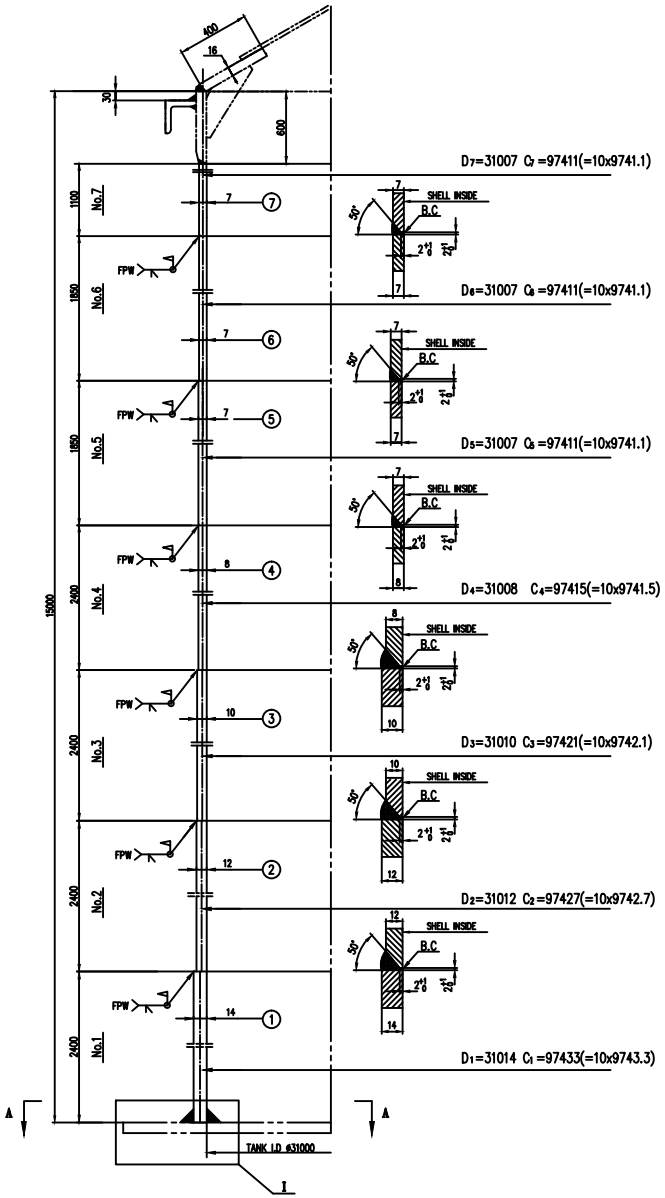

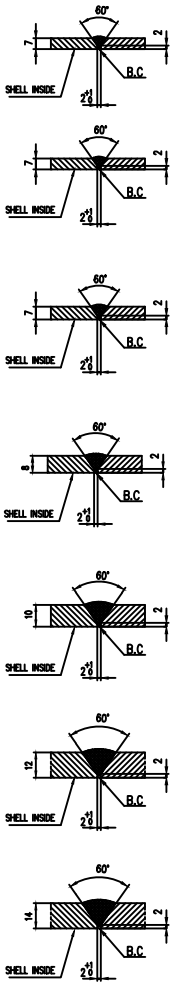

DEVELOPMENT OF SHELL PLATE (OUTSIDE VIEW)

NO SCALE

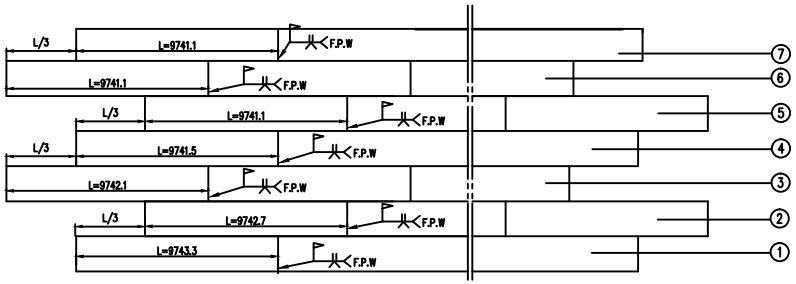

I

NO SCALE

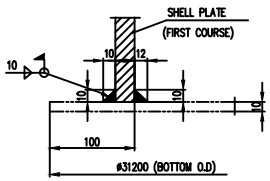

SECTION A-A

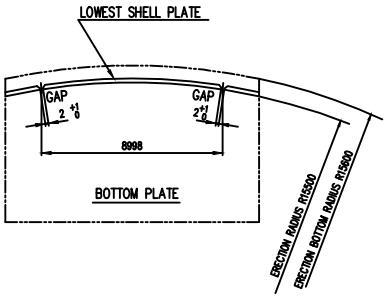

NOTES

1. SHELL PLATE SHOULD BE ALIGNED WITH INSIDE SURFACE.
2. MARKING
   "B.C": BACK CHIPPING AND IT'S NECESSARY TO ELIMINATE DEFECTS OF THE FIRST LAYER IN WELDS.
   "F.P.W": THE FULL PENETRATION WELDS.
3. SHELL TO BOTTOM FILLET WELDS SHALL BE MADE WITH A MIN. OF THREE PASSES.
4. SHRINKAGE EQUALS TO WELD GAP.
5. SR: STRESS RELIEF.
6. AS FOR THE LOCATION OF STRESS RELIEVED PLATE, PLEASE REFER TO RELEVANT ORIENTATION DRAWING.

T.N.W: 106456 Kg

MARK	SET	NO.	DESCRIPTION	MAT'L	W.T.	REMARK
7		10	SHELL PLATE 7x1100x9741	16MnR	5888	
6		10	SHELL PLATE 7x1850x9741	16MnR	9903	
5		10	SHELL PLATE 7x1850x9741	16MnR	9903	
4		10	SHELL PLATE 8x2400x9741.5	16MnR	14683	
3		10	SHELL PLATE 10x2400x9742.1	16MnR	18354	
2		10	SHELL PLATE 12x2400x9742.7	16MnR	22026	
1		4	SHELL PLATE 14x2400x9743.3	16MnR SR	10279	
		6	SHELL PLATE 14x2400x9743.3	16MnR	15420	

REV	DATE	APPD	DESCRIPTION

Project : Tank Modification for the Installation of Internal Floating Roof (TK-06, 07 & 08)

Description : SHELL PLATE
Tank No. (TK-09 & TK-10)

Drawing No. : A013 00 DWC 2520 0105

CEYLON PETROLEUM STORAGE TERMINALS LIMITED
MUTHURAJAWELA TERMINAL